DATASHEET

IXBYT-35 V2.1

Intel Bay Trail Processor based Embedded Industrial PC

Features

- CPU: Intel Bay Trail processors
- Memory: Single Channel SO-DIMM DDR3L up to 8GB
- Display: Dual displays via HDMI, VGA
- Ethernet: 10/100/1000Mbps
- Storage: SATA2.0, mSATA
- Expansion: 1x mini PCIe for WiFi/4G, 1x SIM Slot
- Power: 12V DC input, Phoenix input optional

intel prestige partner Builder

Maxtang®

MAXIMIZING YOUR COMPUTING PRODUCTIVITY

Introduction

The IXBYT-35V2.1 is a small form factor embedded fanless industrial PC based on Intel Bay Trail processors. It supports single-channel SO-DIMM DDR3L up to 8GB with a TDP rate of 10W. Dual displays via HDMI, VGA with Intel Integrated Graphic. A rich interface includes 2xLAN, 6xCOM(default 4*RS232+2*RS485), 1xUSB3.2, and 7xUSB2.0 caters to most market requirements.

The IXBYT-35 is fanless and ventless, designed to be used in an industrial environment as an ideal solution. It can withstand harsh environments, features extensive I/O options, with a long lifecycle for sustainable development. It has a low power consumption, great for energy saving, retains the robust design of all Maxtang product lines with cost advantages. Provides a great user experience, increases productivity with stability and reliability.

H/W Monitor

Watchdog

GPIO

Brightness

I/O Interfaces

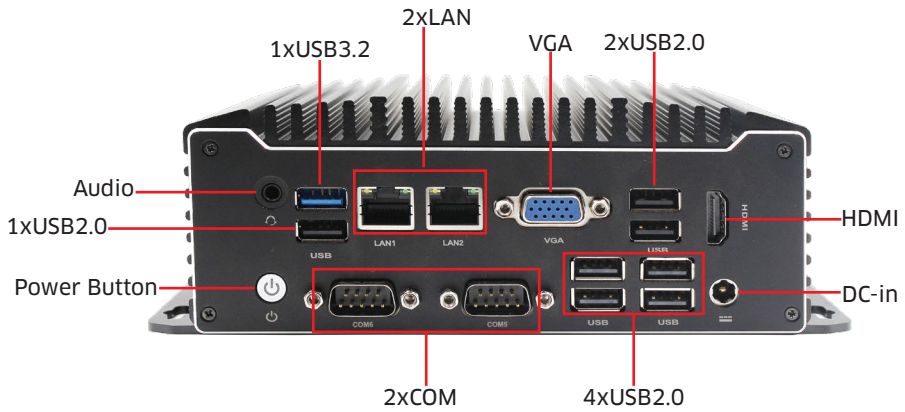

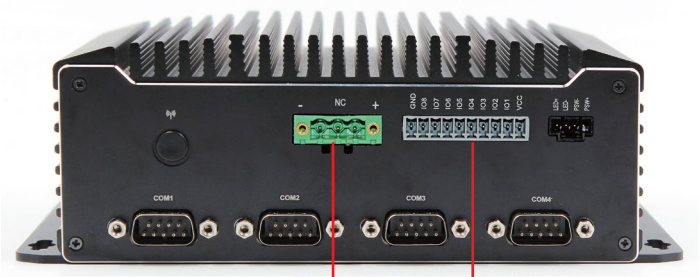

Technical Specifications

Processor	CPU	J1800	J1900	N2940
	Base Frequency	2.41 GHz	2.00 GHz	1.83 GHz
	Burst Frequency	2.58 GHz	2.42 GHz	2.52 GHz
	Cache	2MB L2	2MB	2MB
	BIOS	AMI UEFI BIOS		
Memory	Type	Single Channel SO-DIMM DDR3L		
	Max Capacity	8GB		
Display	GPU	Intel Integrated Graphics based on CPU		
	Display via	HDMI+ VGA		
Ethernet	Speed	10/100/1000Mbps		
	Controller	intel i211		
	Interface	RJ45		
	Wake on LAN	Yes		
Audio	Audio Codec	Realtek HD		
	Interface	1xCTIA Line-out+Mic-in, support power amplifier		
Hardware		System temperature, Onboard voltage, Watchdog, Auto power on		
Storage	mSATA	1x mSATA for SSD		
	SATA2.0	1x SATA2.0		
Expansion	mini-PCIe	1x mini-PCIe for WiFi/4G/Bluetooth		
	SIM	1x Micro SIM		
I/O	LAN	2		
	COM	6xCOM: 4*RS232+2*RS485(COM5,COM6) default, optional 6*RS232		
		The COM5,COM6 are 2-wire serial communication		
	HDMI	1		
	VGA	1		
	USB2.0	7		
	USB3.2	1		
	Audio	1 (Line-out+ Mic-in)		
	DC-in	1		
Dimension	Size	165mm x 125mm x 65mm		
Power	Standard port	12V		
	Phoenix port	12-30V Phoenix input optional		
	Peripheral Input	For Fan and SATA		
	LED Indicator	Power indicator		
Temperature	Operating Temp.	-20°C to 60°C		
	Storage Temp.	-40°C to 80°C		
Cooling		Passive		
Operating System		Win7/8/10 32/64bit, Linux 32/64 bit		

*All specifications and photos are subject to change without notice.

Dimensions

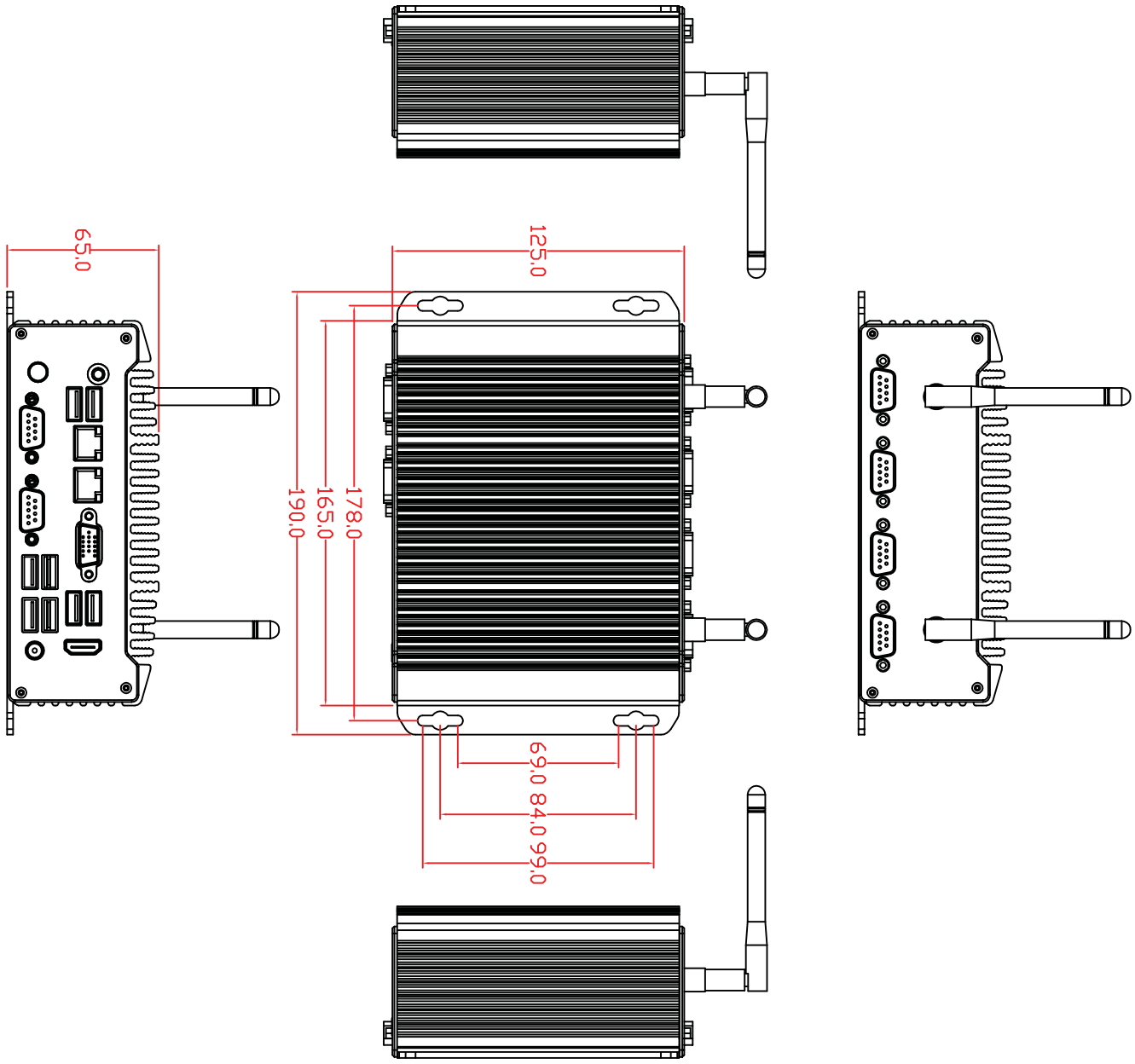

Copyright © 2022 Maxtang Technology Co. Ltd. All rights reserved. All data is for information purposes only and not guaranteed for legal purposes. Information has been carefully checked and is believed to be accurate however, no responsibility is assumed for inaccuracies. Maxtang and the Maxtang logo and all other trademarks or registered trademarks are the property of their respective owners and are recognized.

Maxtang®
MAXIMIZING YOUR COMPUTING PRODUCTIVITY

SHENZHEN MAXTANG COMPUTER CO., LTD.
303, 3/F, Building 2, Runzhi R&D Center, Xin'an Street, Bao'an District, Shenzhen, China 518133
Tel.: +86 755 86143003 I Fax: +86 755 86143003 I info@datangpc.com

www.maxtangpc.com