DATASHEET

WL-35V2.0

Intel® Whiskey Lake-U Series Processor based 3.5” Single Board Computer

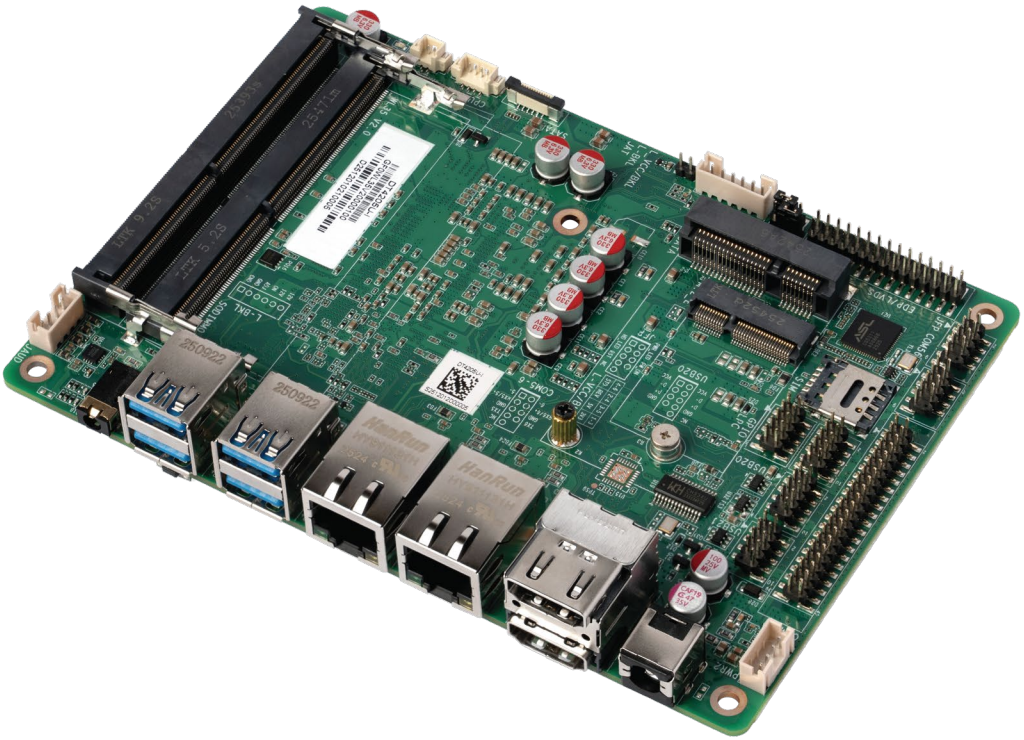

Features

- CPU: Intel® Whiskey Lake-U Processor
- Memory: Dual channel SO-DIMM DDR4 up to 64 GB
- Display: Integrated Intel® UHD Graphics via 2HDMI+ eDP/LVDS
- Ethernet: 10/100/1000 Mbps, 2xIntel i210
- Storage: SATA FPC, mSATA for SSD or 4G Module
- Expansion: M.2 Key E for WiFi &BT, SIM Slot
- Power: 12V/19V DC input or 9-35V optional

intel prestige partner Builder

Maxtang®
MAXIMIZING YOUR COMPUTING PRODUCTIVITY

Introduction

The WL35 V2.0 is a compact 3.5” single board computer based on Intel® Whiskey Lake-U processors, supporting CPU options from Celeron® 4205U to Core™ i7-8565U within a 15W power envelope. Designed for embedded and industrial computing, the board delivers reliable processing performance with dual-channel DDR4 memory up to 64GB and integrated Intel® UHD Graphics. Display output is supported through 2× HDMI 2.0 and eDP/LVDS, enabling flexible integration into panel PCs, control terminals, and embedded display systems.

Engineered for long-term deployment, the WL35 V2.0 features rich industrial I/O and expansion, including 6× COM ports, dual Intel® Gigabit LAN, multiple USB interfaces, GPIO, and versatile storage options via mSATA, SATA, and M.2 Key E. Industrial-grade design elements such as wide operating temperature support (-20°C to 60°C), optional 9–35V wide-voltage input, hardware monitoring, watchdog, and optional TPM 2.0 ensure stable 24/7 operation. With support for Windows 10/11 and Linux (64-bit), the WL35 V2.0 is well suited for industrial control, embedded gateways, panel PC back-end systems, and other space-constrained embedded applications.

Linux

ubuntu

Windows

H/W Monitor

Watchdog

GPIO

Brightness

HDMI HIGH-DEFINITION MULTIMEDIA INTERFACE

I/O Interfaces

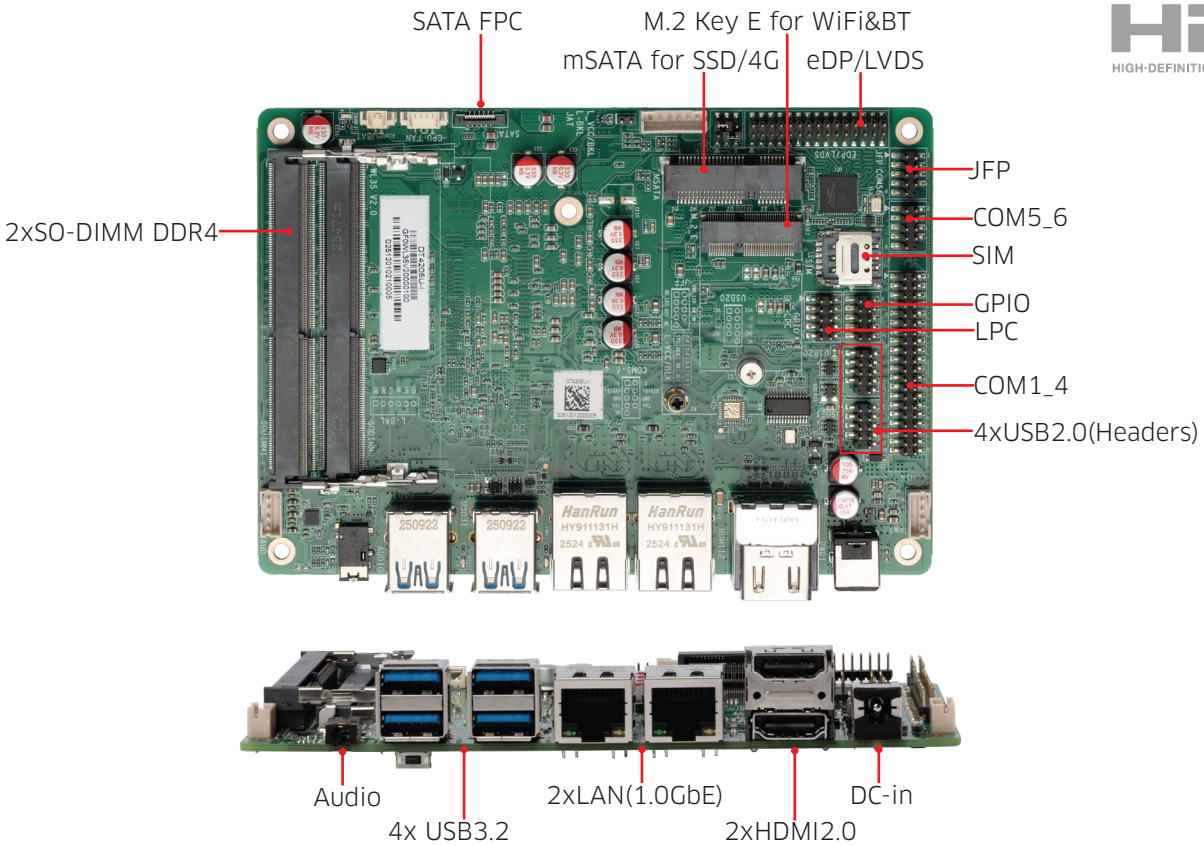

Technical Specifications

Processor	Whiskey Lake U	4205U	5405U	8145U	8265U
	Total Cores/Threads	2C/2T	2C/4T	2C/4T	4C/8T
	Base Frequency	1.80GHz	2.30GHz	2.10GHz	1.60GHz
	Max Frequency	/	/	3.90GHz	3.90GHz
	Cache	2MB	2MB	4MB	6MB
	TDP	15W	15W	15W	15W
	GPU	Intel® UHD Graphics for 8th Generation Intel® Processors			
	BIOS	AMI UEFI BIOS			
Memory	Type	Dual Channel SO-DIMM DDR4			
	Max. Capacity	64GB			
Display	Graphics	Integrated Graphics depends on the CPU model, see GPUs			
	Display via	2 x HDMI2.0, 1 x eDP/LVDS			
Ethernet	Controller	2 x Intel i210			
	Speed	10/100/1000Mpbs			
	Interface	2 x RJ45			
	Wake on LAN	Yes			
Audio	Audio Codec	SenaryTech SN6186			
	Interface	1 x CTIA Audio Jack, Line_out+Mic_in in one, supports power amplifier			
Hardware Monitoring		CPU system temperature, on-board DC-in voltage, watchdog, auto power on			
Storage/Expansion	mSATA	1 x mSATA for SSD or 4G Module			
	M.2_E	1 x M.2 Key E for 2230 Wi-Fi & BT Module			
	SATA	1 x SATA3.0 FPC			
	SIM	1 x SIM Slot			
I/O Interface	COM	6 x COM: default 4*RS232+2*RS485 or 6*RS232 optional			
	USB3.2	4 x USB3.2(rear ports)			
	USB2.0	4 x USB2.0(onboard headers)			
	GPIO	8-bit			
	TPM2.0	optional			
Dimension	Size	146 mm x 102mm			
	Form Factor	3.5" SBC			
Power	Standard Port	12V/19V DC-IN			
	Optional	9-35V			
	Peripheral Input	For Fan and SATA			
	LED Indicator	Power Indicator			
Temperature	Operating Temp.	-20°C to 60°C			
	Storage Temp.	-40°C to 80°C			
Operating System		Win10/11 64bit, Linux 64bit			

* All specifications and photos are subject to change without notice.

Block Diagram

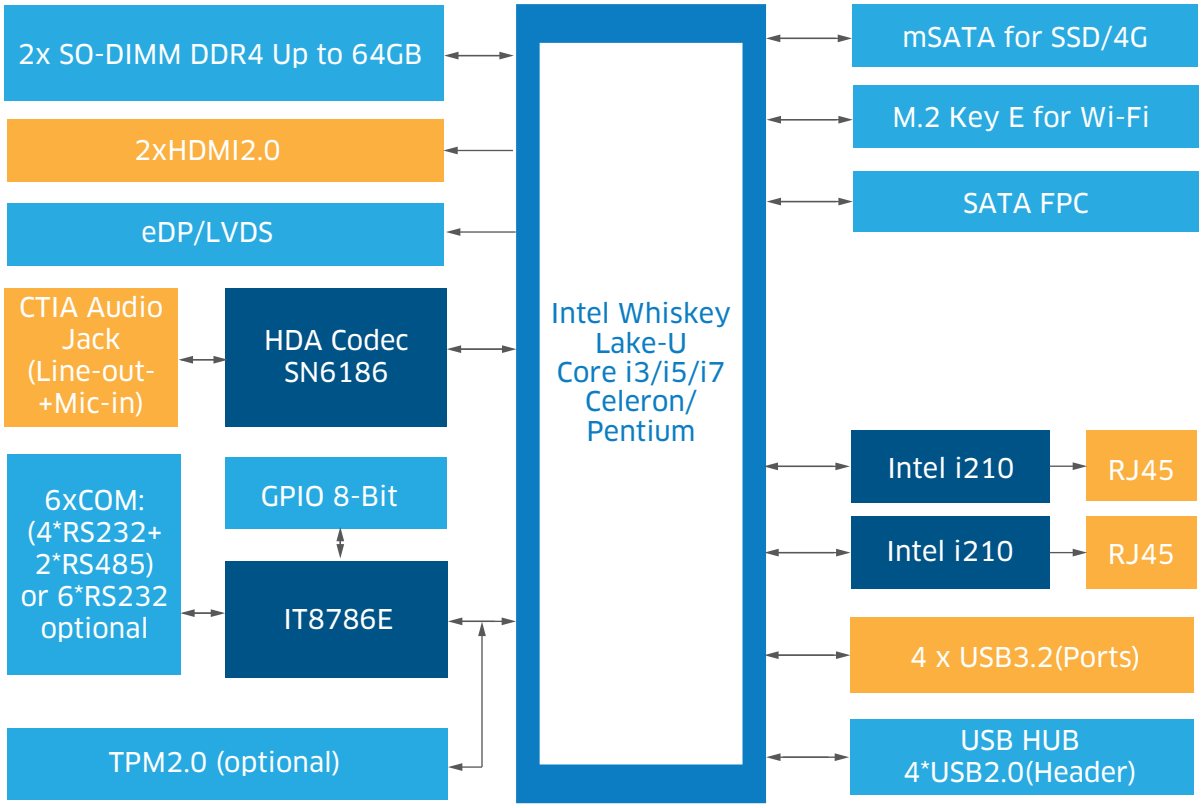

Order Information

Model Name	Description
DT4205U-I	DT 3.5INCH Intel Celeron 4205U WL35V20 2DDR4 2LAN 4*RS232+2*RS485 2*HDMI+LVDS MSATA/4G
DT5405U-I	DT 3.5INCH Intel Pentium 5405U WL35V20 2DDR4 2LAN 4*RS232+2*RS485 2*HDMI+LVDS MSATA/4G
DT8145U-I	DT 3.5INCH Intel Core i3-8145U WL35V20 2DDR4 2LAN 4*RS232+2*RS485 2*HDMI+LVDS MSATA/4G
DT8265U-I	DT 3.5INCH Intel Core i5-8265U WL35V20 2DDR4 2LAN 4*RS232+2*RS485 2*HDMI+LVDS MSATA/4G

*For customized options, please consult regional sales. And please confirm the model name and description before purchasing. *The model name and description might vary due to inventory changes.

Copyright © 2026 Maxtang Technology Co. Ltd. All rights reserved. All data is for information purposes only and not guaranteed for legal purposes. Information has been carefully checked and is believed to be accurate however, no responsibility is assumed for inaccuracies. Maxtang and the Maxtang logo and all other trademarks or registered trademarks are the property of their respective owners and are recognized. The terms HDMI, HDMI High-Definition Multimedia Interface, HDMI Trade dress, and HDMI Logos are trademarks or registered trademarks of HDMI Licensing Administrator, Inc

Maxtang®
MAXIMIZING YOUR COMPUTING PRODUCTIVITY

SHENZHEN MAXTANG COMPUTER CO., LTD.
303, 3/F, Building 2, Runzhi R&D Center, Xin'an Street, Bao'an District, Shenzhen, 518133 China
Tel.: +86 755 86143003 I Fax: +86 755 86143003 I info@datangpc.com

www.maxtangpc.com