DATASHEET

SBC-KL20

Intel Kaby Lake-U Embedded Motherboard

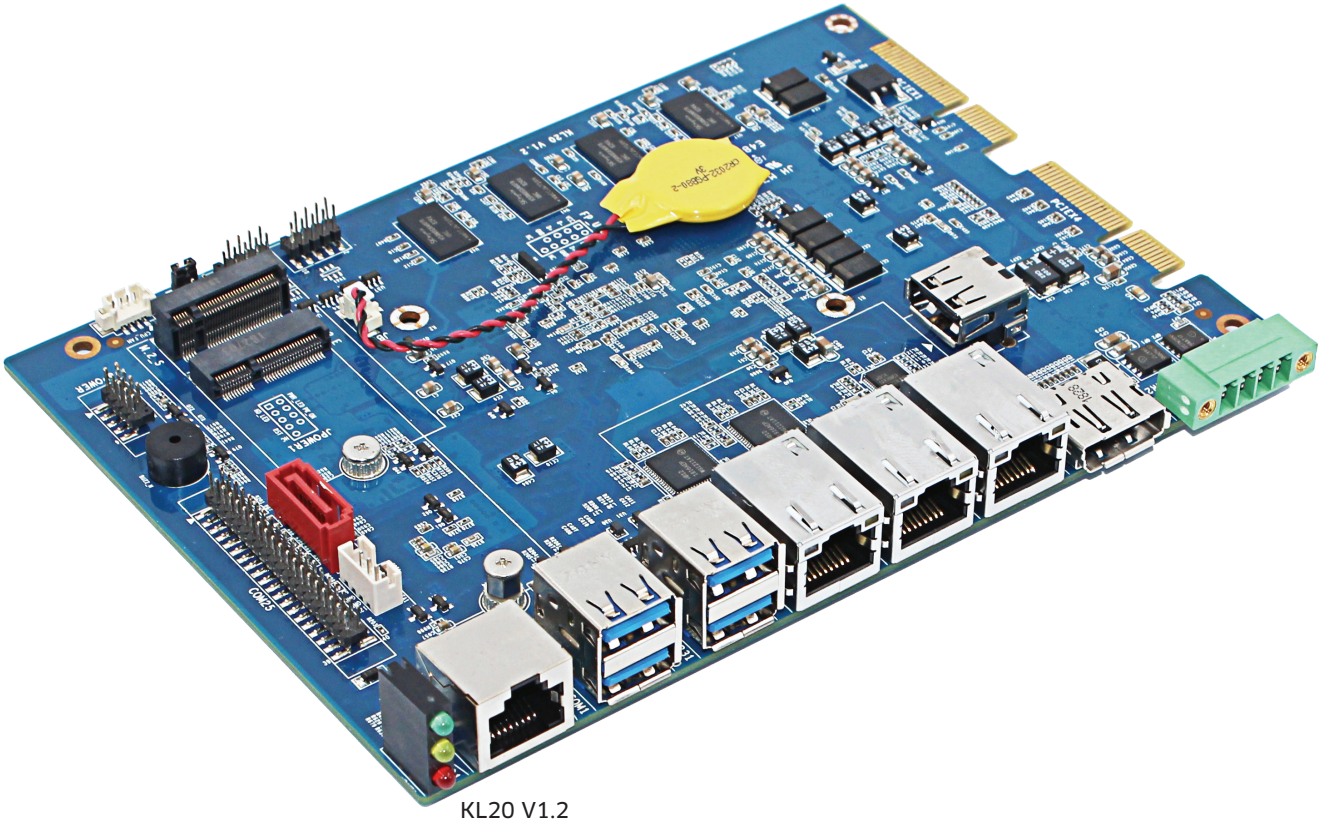

KL20 V1.2

Features

- CPU: Intel Kaby Lake-U Core and Celeron BGA processors
- Memory: Dual channel DDR4 max 32 GB
- Display: DP
- Ethernet: Support 10/100/1000 Mbps ethernet card
- Storage: SATA3.0, M.2, PCIe X4, PCIe X1
- Power: 16V-36V 4-pin power

intel IoT Solutions Alliance

Maxtang®
MAXIMIZING YOUR COMPUTING PRODUCTIVITY

Functional Block Diagram

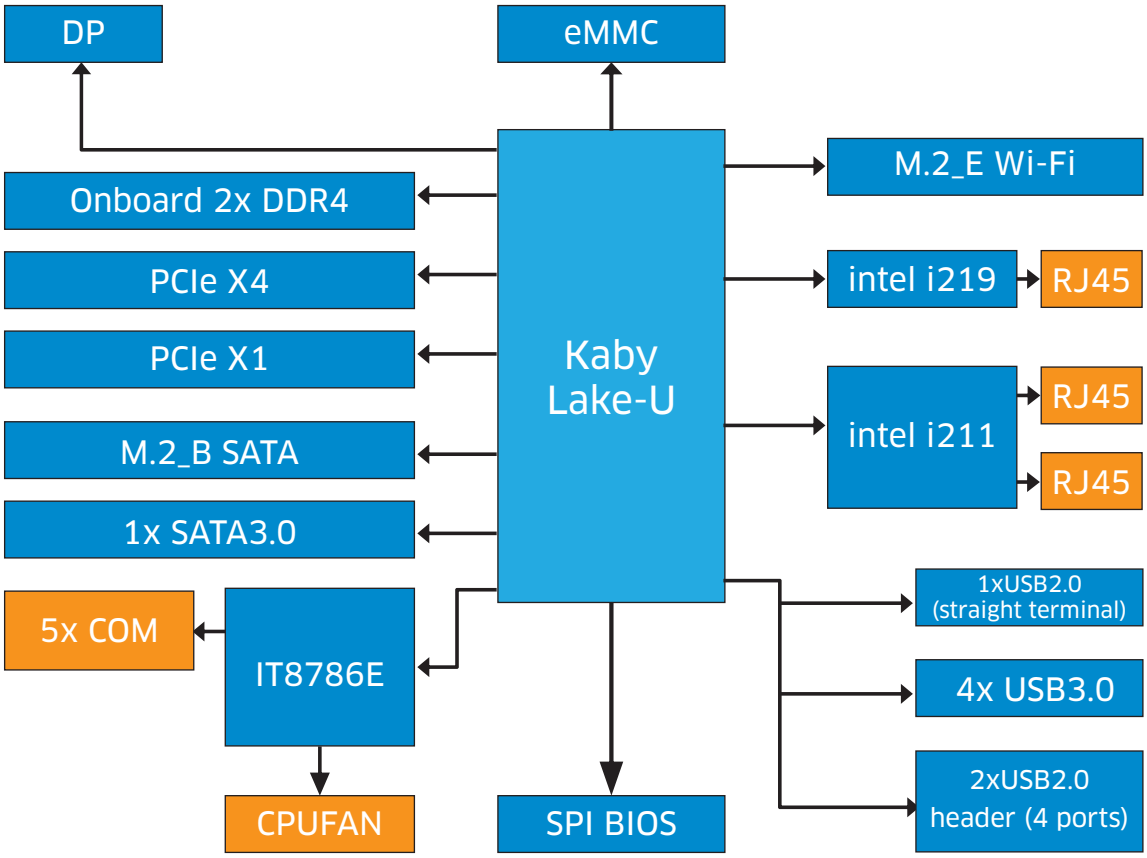

I/O Interfaces

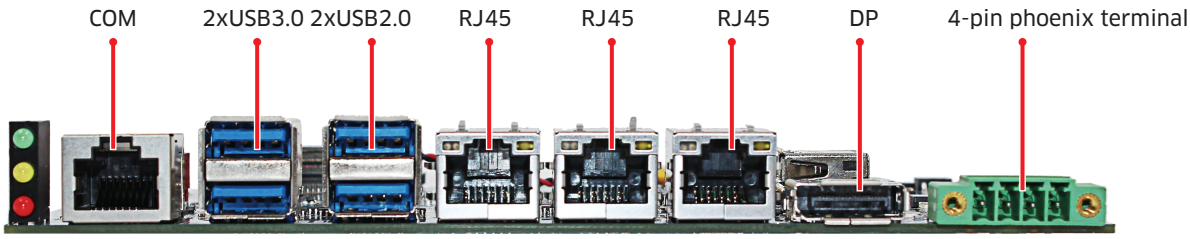

Linux ubuntu Windows H/W Monitor Watchdog

Copyright © 2018 Maxtang Technology Co. Ltd. All rights reserved. All data is for information purposes only and not guaranteed for legal purposes. Information has been carefully checked and is believed to be accurate however, no responsibility is assumed for inaccuracies. Maxtang and the Maxtang logo and all other trademarks or registered trademarks are the property of their respective owners and are recognized.

Technical Specifications

Processor	CPU	3865U	i5-7300U	i5-7200U
	Base frequency	1.8GHz	2.6GHz	2.5GHz
	Max turbo frequency	/	3.5GHz	3.1GHz
	Cache	2MB	3MB	3MB
	TDP	15W	15W	15W
	BIOS	AMI 8MB UEFI BIOS		
Memory	Type	2x DDR4		
	Max capacity	32GB		
Display	GPU	Intel HD Graphics 610/620 (based on CPU)		
	Port	DP		
Ethernet	Speed	10/100/1000 Mbps		
	Controller	2x intel i211 + 1x intel i219		
	Interface	3x RJ45		
	Wake on LAN	Yes		
Hardware		CPU system tempereature, onboard voltage, watchdog, auto power on		
Storage	M.2	1 for 2242/2280 SSD (SATA3.0)		
	SATA3.0	1x SATA3.0		
	eMMC	Yes		
Expansion	PCIe	1x PCIe X4+1x PCIe X1		
	M.2	1 for Wi-Fi		
I/O	COM	1x RJ45, support RS485/422/262		
	USB	4x USB3.0		
	LAN	3x RJ45		
	DP	1		
Internal I/O	COM	5x RS232		
	USB	4x USB2.0 header + 1x straight terminal		
	JPOWER	1		
Dimension	Size	169mm x 120mm		
Board type		SBC		
Power	Standard port	16V-36V 4-pin phoenix terminal		
	Peripheral	For fan and SATA		
Temperature	Operating Temp.	-20°C to 60°C		
	Storage Temp.	-40°C to 80°C		
Operating System		Win 10 64bit, Linux		

* All specifications and photos are subject to change without notice.

Maxtang®
MAXIMIZING YOUR COMPUTING PRODUCTIVITY

SHENZHEN MAXTANG COMPUTER CO. LTD.
6/F, Bldg 3, Honghui Indl Park, Liuxian 2nd Road, Bao'an Dist, Shenzhen, China 518101
Tel.: +86 755 86143003 I Fax: +86 755 86143003 I sales@datangpc.com

www.maxtangpc.com