DATASHEET

ALD-75

Intel Alder Lake-S Processors based Embedded ATX Motherboard with Z690

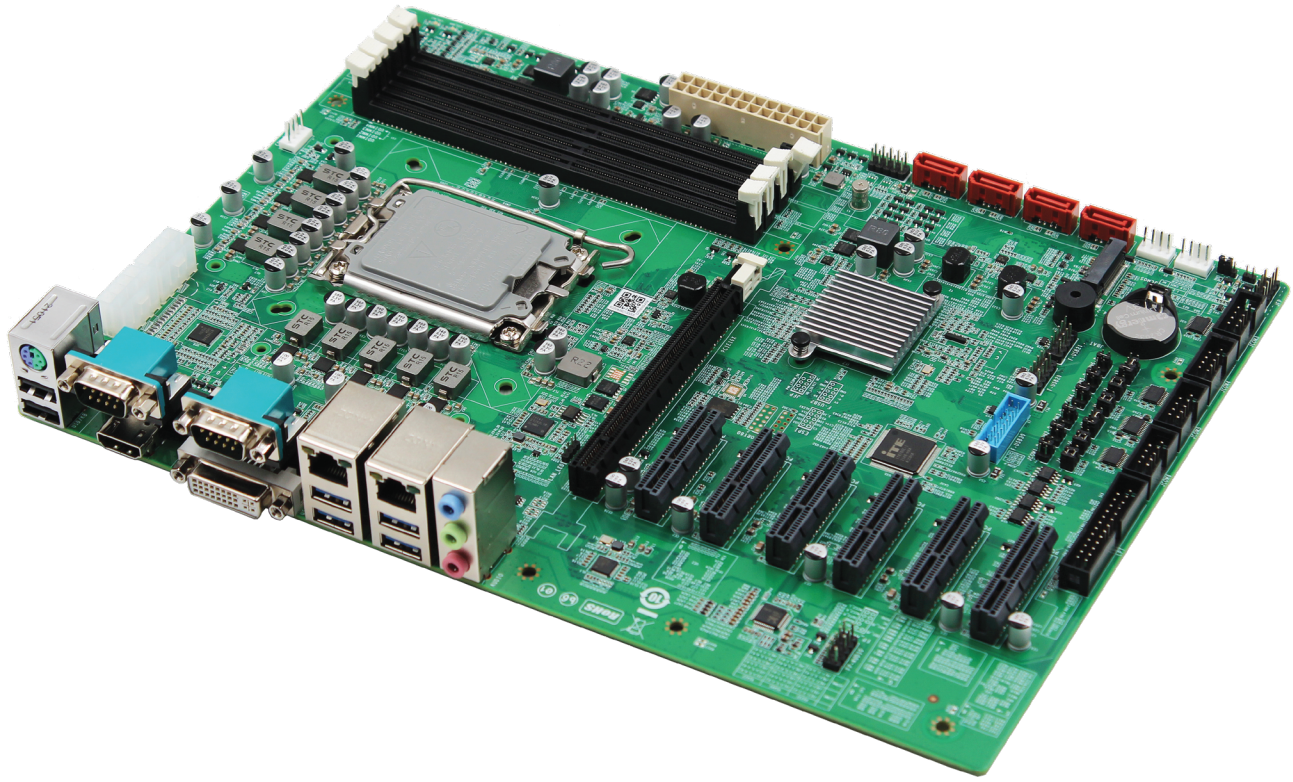

Features

- CPU: Intel Alder Lake-S Processor
- Memory: 4x UDIMM DDR4 Up to 128GB
- Display: Integrated Graphics display via HDMI+DVI-I(VGA)
- Ethernet Controllers: 1xIntel i219+1xIntel i225
- Storage: 1xM.2 for NVMe SSD, 4xSATA
- Expansion: 1*PCIe2X, 5*PCIe4X, 1*PCIe16X
- Power: ATX_24PIN + 2*8PIN

intel IoT Solutions Alliance
Industrial Solution Builders Specialist

Maxtang®
MAXIMIZING YOUR COMPUTING PRODUCTIVITY

Introduction

The Maxtang ATX ALD-75 embedded motherboard is based on an Intel Alder Lake-S series processor with Z690 Chipset, providing a complete PC platform with powerful performance. It supports dual displays in addition to four UDIMM DDR4 memory. Features Intel i219 and i225 Ethernet controllers, up to 2.5GbE for high-speed communication. It has four SATA plus one M.2 for storage, a rich I/O interface includes 6xCOM, 6 x USB2.0, 6 x USB3.2, and 7xPCIe for greater expansion.

The ALD-75 is an ideal solution for various industrial applications. It retains the robust design just like all other Maxtang products with cost advantages. Our goal is to provide an excellent customer experience with a great product base on flexibility and reliability.

Linux

ubuntu Linux

Windows

H/W Monitor

Watchdog

GPIO

Brightness

I/O Interfaces

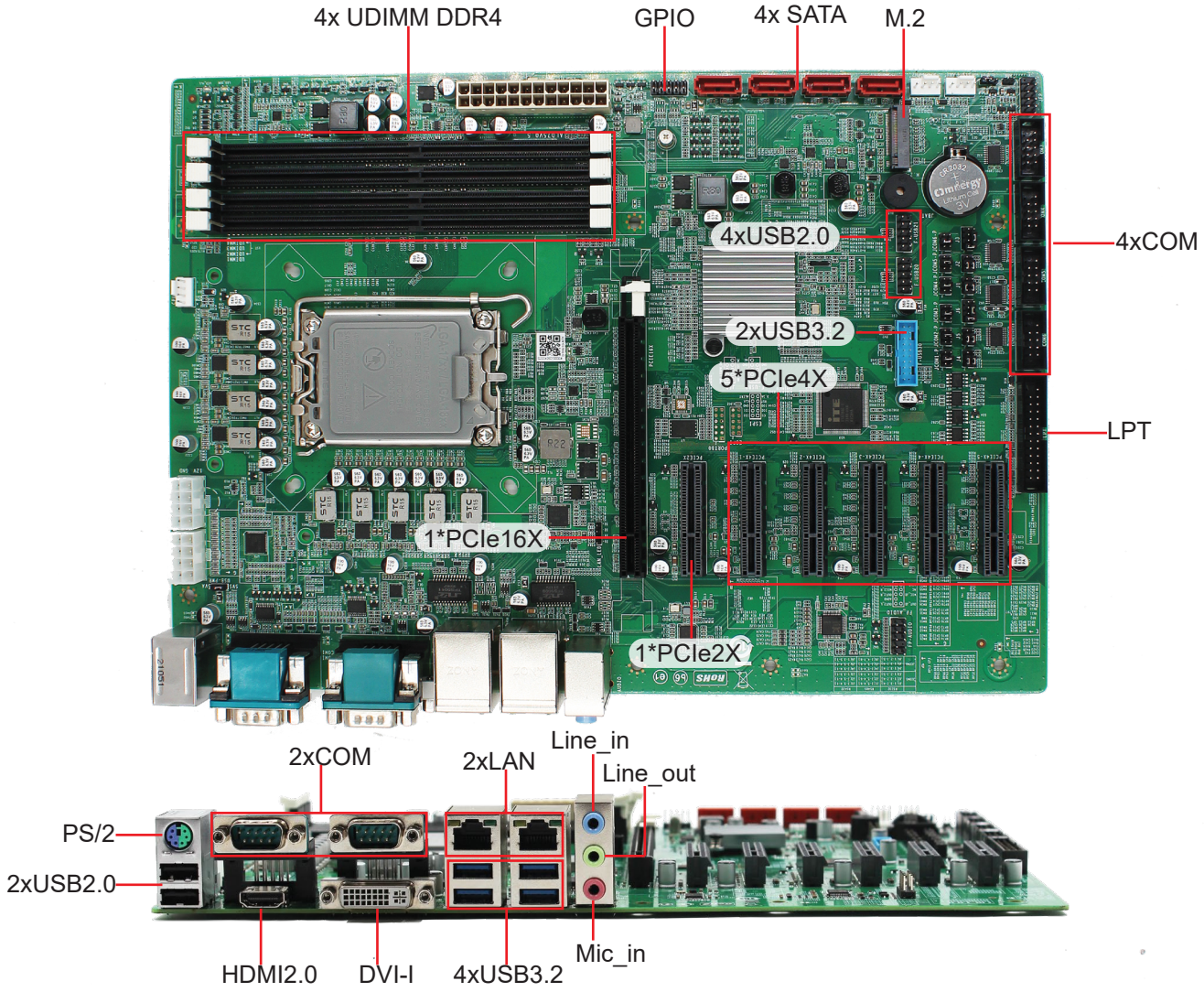

Technical Specifications

Processor	CPU	Intel Alder Lake-S Processor (LGA1700)
	Chipset	Z690
Memory	Type	4x UDIMM DDR4-3200
	Max Capacity	Up to 128GB
Display	GPU	Intel Integrated Graphics based on CPU
	Port	1x HDMI +1x DVI-I(VGA)
Ethernet	Controller	Intel i219,Date Rate Per Port:1.0GbE
		Intel i225, Date Rate Per Port:2.5GbE
	Interface	2x RJ45
Audio	Audio Codec	Realtek HD
	Interface	Line-in,Line-out, Mic-in,
Hardware		CPU and system temperature, on-board voltage, watchdog
Storage	SATA	4x SATA
	M.2	1x M.2 for 2280 NVMe(PCIe4.0)/SATA SSD
Expansion	PCIe5.0	1(PCIe16X)
	PCIe4.0	3(PCIe4X-1,PCIe4X-3,PCIe4X-4)
	PCIe3.0	3(PCIe2X, PCIe4X-2, PCIe4X-5)
I/O Interface	LAN	2
	COM	6x RS232 Default (Optional RS232/422/485 for COM5_6)
	USB2.0	2x USB2.0 Ports+ 4x USB2.0 Header
	USB3.2	4x USB3.2 Ports + 2x USB3.2 Header
	HDMI2.0	1
	DVI-I	1
	Audio	1xLine-in + 1x Line-out + 1x Mic-in
	PS/2	1 (for PS/2 keyboard and mouse)
	GPIO	8-bit
	LPT	1
	TPM2.0	Optional
Dimension	Size	304.8mm x 218.44mm
	Board Type	ATX
Power	Standard Port	ATX_24PIN + 2*8PIN
	Peripheral Input	For Fan and SATA (Compatible with 1150X)
Temperature	Operating Temp.	0 ~ 60° C, depends on CPU speed and cooler solution
	Storage Temp.	-40 ~ 85° C
Operating System		Windows 10/11, Linux

* All specifications and photos are subject to change without notice.

Functional Block Diagram

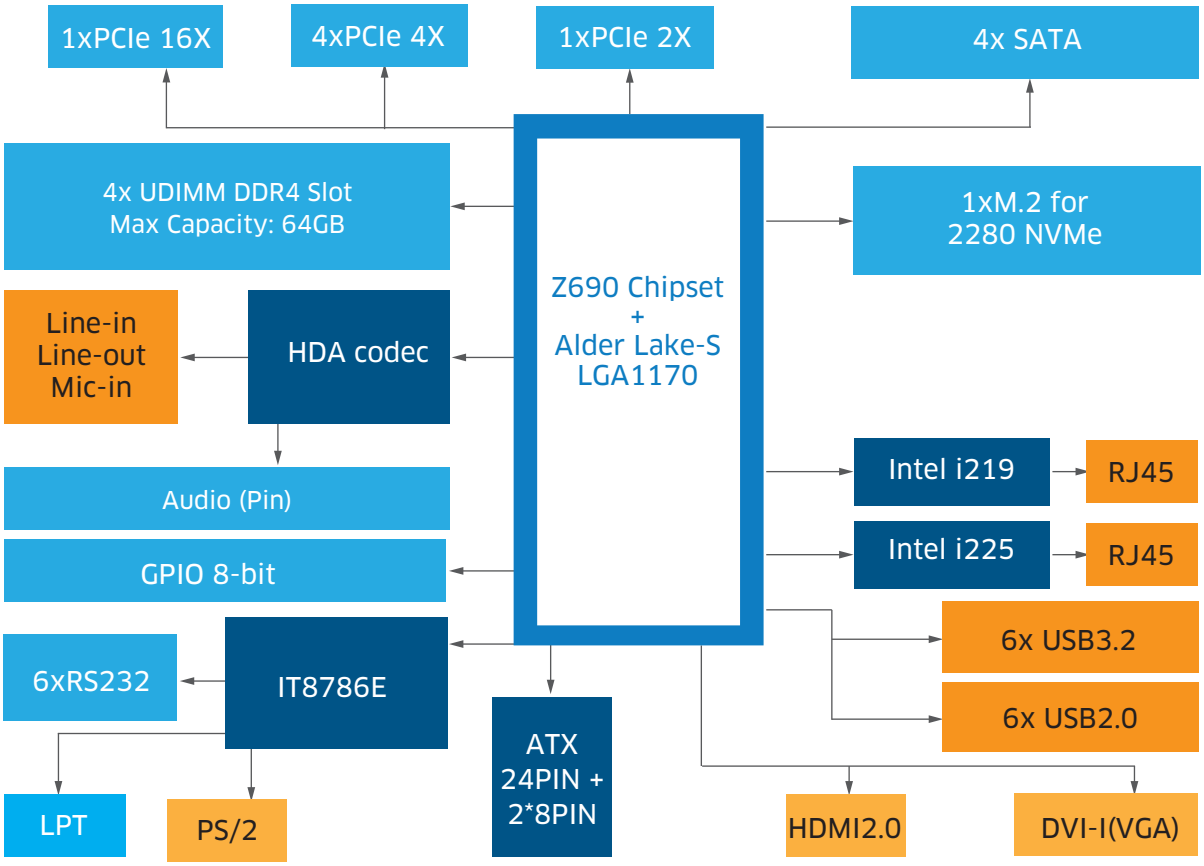

Copyright © 2022 Maxtang Technology Co.Ltd. All rights reserved. All data is for information purposes only and not guaranteed for legal purposes. Information has been carefully checked and is believed to be accurate however, no responsibility is assumed for inaccuracies. Maxtang and the Maxtang logo and all other trademarks or registered trademarks are the property of their respective owners and are recognized.

Maxtang®
MAXIMIZING YOUR COMPUTING PRODUCTIVITY

SHENZHEN MAXTANG COMPUTER CO. LTD.
6/F, Bldg 3, Honghui Indl Park, Liuxian 2nd Road, Bao'an Dist, Shenzhen, China 518101
Tel.: +86 755 86143003 I Fax: +86 755 86143003 I sales@datangpc.com

www.maxtangpc.com