DATASHEET

mITX-TL10

Intel Tiger Lake-U Processor-Based Motherboard with 4 HDMI Displays

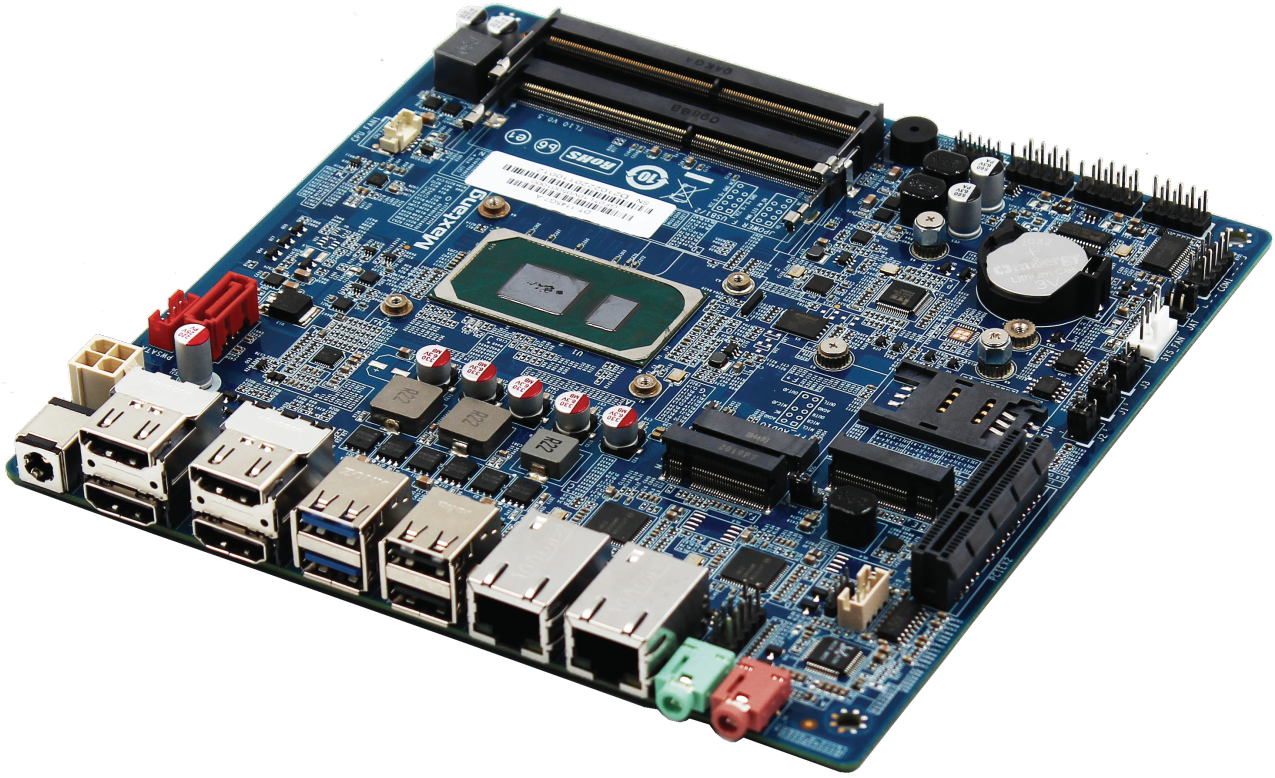

Features

- CPU: Intel Tiger Lake-U Processors
- Memory: Dual Channel SO-DIMM DDR4 (UP to 64 GB)
- Display: 4x HDMI 2.0 displays
- Ethernet: 10/100/1000 Mbps
- Storage: 1xSATA, 1xM.2 SSD NVMe
- Expansion: 1x M.2 For WiFi, 1x M.2 for 4G/5G, 1x PCIe2X
- Power: 12V/19V DC input

intel 5G IoT Solutions Alliance
Industrial Solution Builders Specialist

Maxtang®
MAXIMIZING YOUR COMPUTING PRODUCTIVITY

Introduction

The Maxtang mini-ITX TL10 embedded motherboard is based on Intel Tiger Lake-U processors, provides a complete PC platform with high performance. It supports 4xHDMI2.0 displays in addition to dual-channel SO-DIMM DDR4 memory. Features with two 1-Gigabit Ethernet controllers, 3x M.2 for SSD modules, Wi-Fi, 4G/5G, a rich interface as 6 x USB2.0, 2 x USB3.0, 1 x Mic-in, 1 x Line-out, caters to most market requirements.

The TL10 is an ideal solution for applications requiring high-speed communication, front-end mini-server, or high-resolution display products; like electronic gaming machines, medical imaging, interactive digital signage, thin clients, or PDS terminals. It retains the robust design just like all other Maxtang products with cost advantages.

Linux
ubuntu
Windows

H/W Monitor
Watchdog
GPIO
Brightness

I/O Interfaces

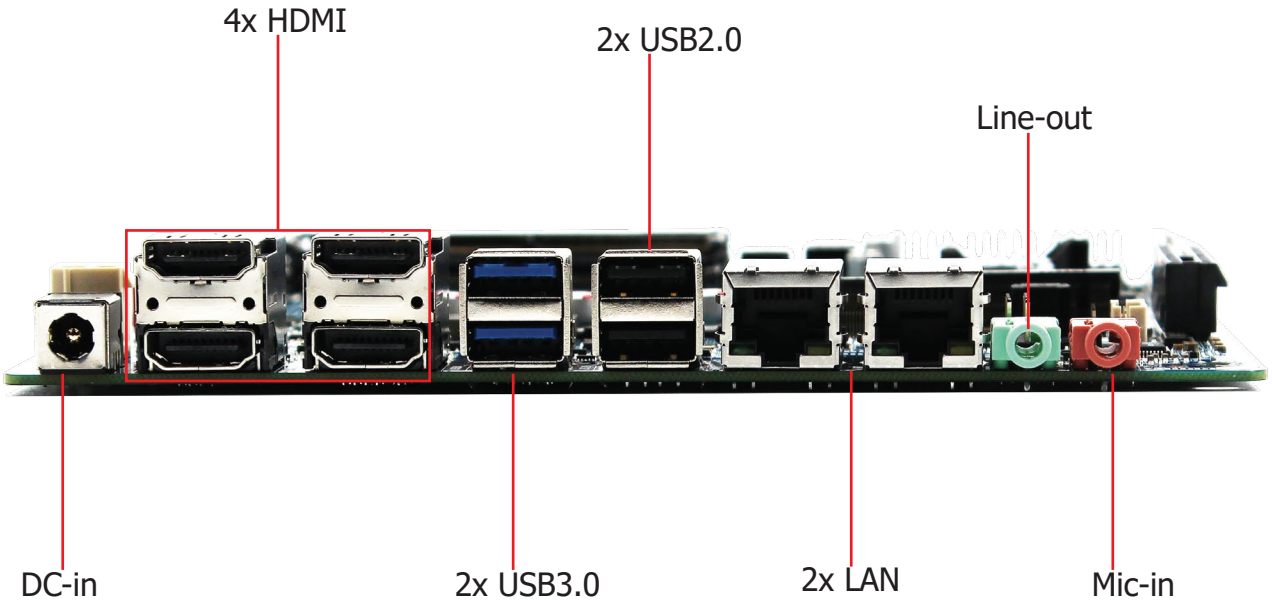

Technical Specifications

Processor	CPU	Celeron-6305	i3-1115G4	i5-1145G7	i7-1165G7
	Core Frequency	1.8 GHz			
	Turbo Frequency		4.1GHz	4.4GHz	4.7GHz
	Cache	4MB	6MB	8MB	12MB
	BIOS	AMI 256MB SPI			
Memory	Type	2x SO-DIMM DDR4			
	Max Capacity	64 GB			
Display	GPU	Depends on CPU			
	Display Port	4x HDMI 2.0, 4K Resolution HD Display			
Ethernet	Speed	10/100/1000 Mbps			
	Controller	Intel i211			
	Interface	RJ-45			
Audio	Audio Codec	Realtek HD			
	Interface	Mic-in, Line-out, Audio header, amplifier header			
Hardware		CPU System temperature, onboard voltage, watchdog			
Storage	M.2	1x M.2 for SSD NVMe			
	SATA	1x SATA			
Expansion	M.2	1x M.2 for 4G/5G			
	M.2	1x M.2 for WiFi			
	PCIe 2x	1			
I/O	LAN	2			
	COM	1x COM header (RS232 Default or RS485/422)			
	USB 2.0	2x USB2.0 Ports + 4x USB2.0 header			
	USB 3.0	2			
	DC-in	1			
	LPC	1			
Dimension	Type	Mini ITX			
	Size	170mm x 170mm			
Power	Standard Port	12V/19V DC-in / 4 Pin Power			
Temperature	Operating Temp.	-20°C to 60°C			
	Storage Temp.	-40°C to 80°C			
Cooling Method		Active			
Operating System		Windows 10 64 bit, Linux 64 bit			

* All specifications and photos are subject to change without notice.

Functional Block Diagram

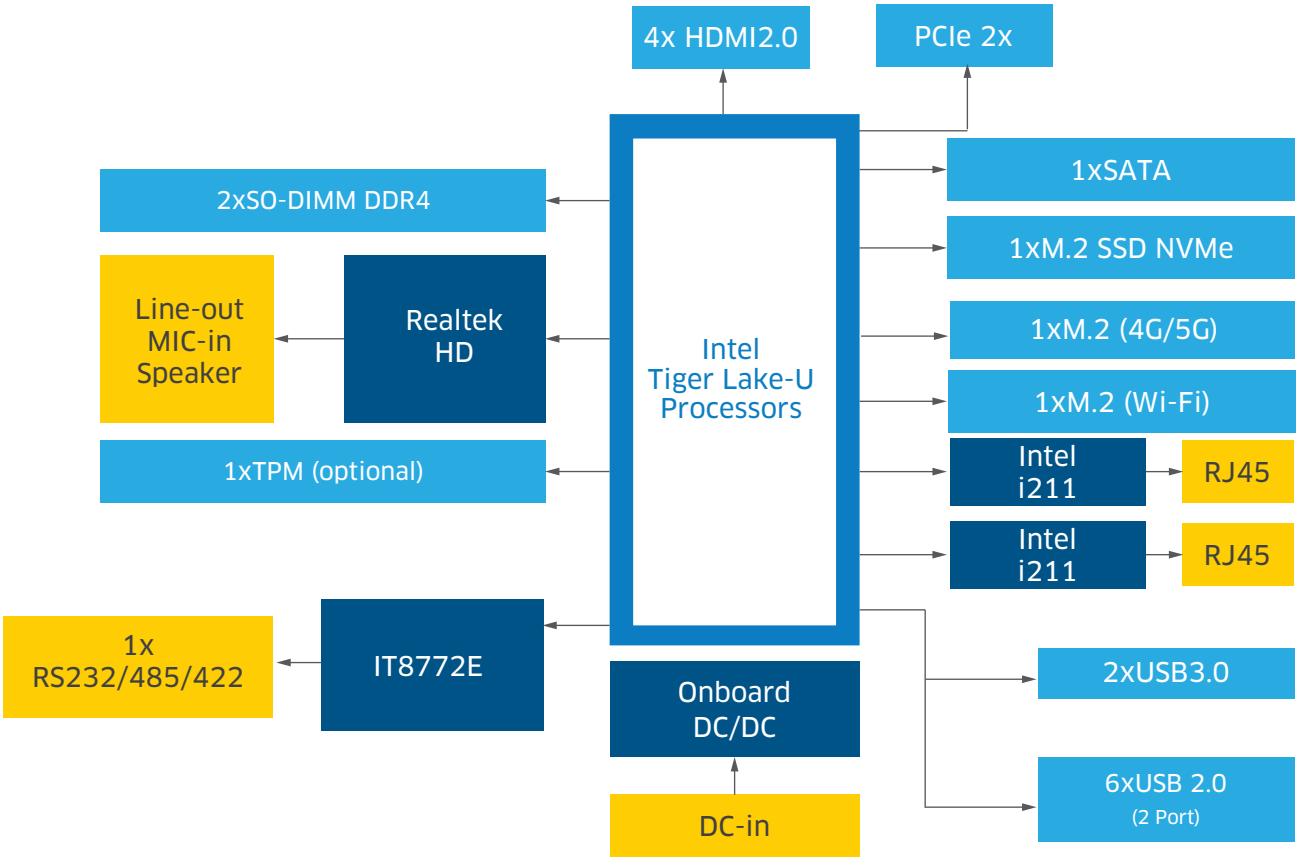

Applications

- Vertical markets: medical imaging, smart school, high-end gaming
- Stock trading: multi-tasking, multi-display
- Industrial controlling: factory controlling and testing, security system
- Digital sigage: slip-flat display, shopping mall billboard, scoreboard

Copyright © 2018 Maxtang Technology Co Ltd. All rights reserved. All data is for information purposes only and not guaranteed for legal purposes. Information has been carefully checked and is believed to be accurate however, no responsibility is assumed for inaccuracies. Maxtang and the Maxtang logo and all other trademarks or registered trademarks are the property of their respective owners and are recognized.

Maxtang®
MAXIMIZING YOUR COMPUTING PRODUCTIVITY

SHENZHEN MAXTANG COMPUTER CO. LTD.
6/F, Bldg 3, Honghui Indl Park, Liuxian 2nd Road, Bao'an Dist, Shenzhen, China 518101
Tel.: +86 755 86143003 I Fax: +86 755 86143003 I sales@datangpc.com

www.maxtangpc.com